VESUVIO Model's 91-8006 & 91-8009

IMPORTANT NOTICE

YOU WILL FEEL A SLIGHT "BOUNCE-BACK" WHEN YOU SIT DOWN. THIS IS NORMAL: NOT A DEFECT. THE PNEUMATIC CYLINDER FOR THE SEAT HEIGHT ADJUSTMENT REACTS TO YOUR WEIGHT BY GIVING A LITTLE

Assembled 91-8006

Assembled 91-8009

Parts

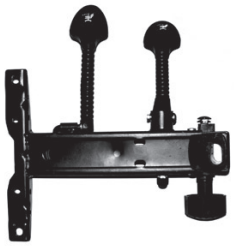

A. [1] Base Plate Mechanism

B. [1] Cylinder
[a] 91-8006 model
[b] 91-8009 model

C. [5] Castors

D. [1] Plastic Ring insert
Model 91-7706 only
(This part can be found in the foot ring Part F)

E. [1] 5-Star Base

F. [1] Foot Ring with Knob
Model 91-8006 only.

G. [1] Backrest

H. [1] Seat

K. [1] Black Cylinder Bellows
Model 91-8009 only

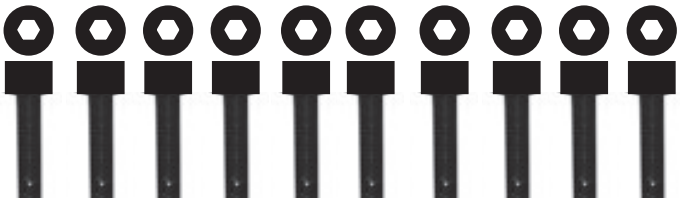

I. [10] M6x20 Hex Head Screws

L.
[4] 3/4" Plastic Washers for armrest attachment

M. [2] Loop Armrests

IMPORTANT

If you have difficulty assembling your chair or need customer service assistance. Please call: Martin Universal Design, Inc. Customer Service Hot Line at 1-800-366-7337. If you need additional parts, it is not necessary to contact your dealer, our Customer Service Rep. will forward them to you immediately.

MARTIN
Universal Design, Inc.
4444 Lawton Avenue, Detroit MI 48208 USA
Tel:(313)895-0700 • Fax:(313)895-0709
E-mail: Custservmud@aol.com
Visit us at: www.MartinUniversalDesign.com

MUD 10/2009

1.

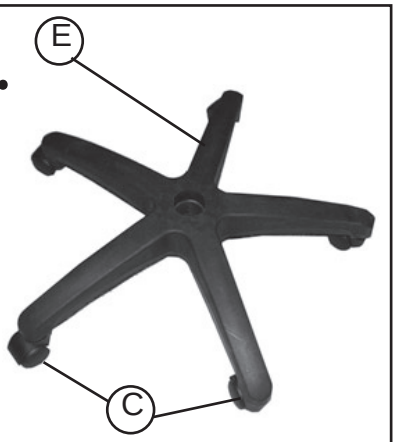

Place 5-star base (E) face down and push [5] castors (C) into each position.

2.

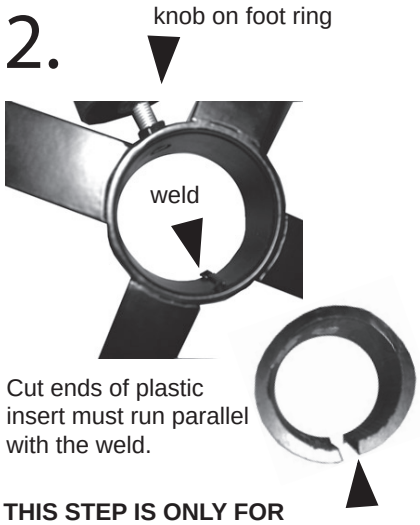

Cut ends of plastic insert must run parallel with the weld.

THIS STEP IS ONLY FOR MODEL 91-8006 ONLY.
Before attaching foot ring (F) to cylinder (B). Begin by loosening the knob on the foot ring and make sure the plastic ringis inserted properly, by making sure the cut ends of the insert run parallel with the weld on the inside of the foot ring hole. The insert should be already in the foot ring. **NOTE: THIS MUST BE POSITIONED PROPERLY TO ALLOW THE CYLINDER TO SLIDE THROUGH THE INSERT EASILY.**

3.

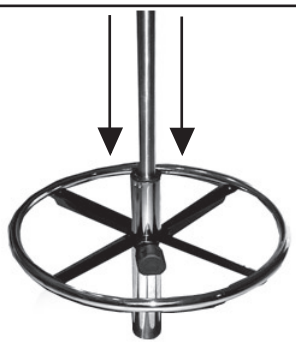

Slide cylinder down through foot ring and tighten knob . After chair is assembled completely, you may adjust foot ring to desired height.

4.

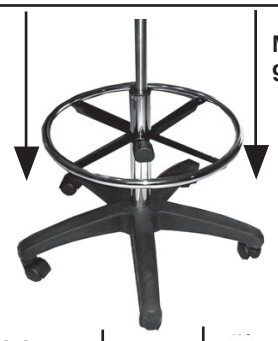

PLEASE NOTE: If you have model number 91-8009, your assembly will be the same but instead of foot ring you will need to place black bellows over top of cylinder after inserting cylinder into base.
Insert wider end of cylinder into hole in base, as shown above.

5.

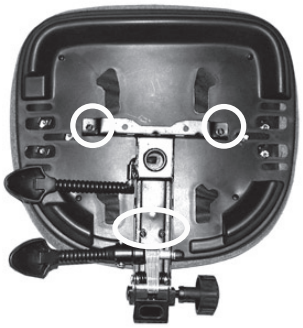

Attach mechanism (A) to seat (H) using [4] M6x20 hex head screws (I). See pic above for specified locations that are circled. Tighten with hex wrench.

6.

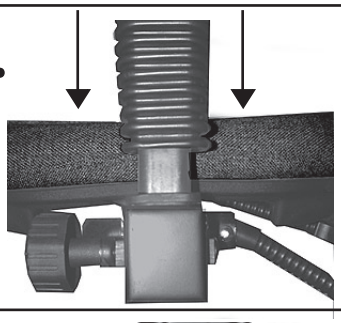

Attach backrest (G) to seat mechanism, by inserting backrest support bar into oval hole in mechanism. Tighten knob on mechanism to secure.

7.

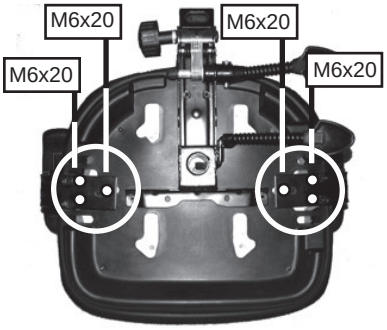

Attach armrests to bottom side of seat. Each Armrest (M) uses [3] M6x20 screws (I). Tighten with Hex-wrench.

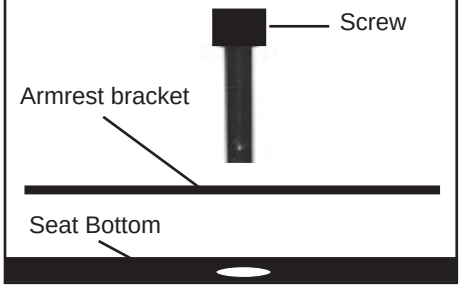

8.

Attach seat/backrest/armrest assembly to cylinder by inserting top of cylinder into hole on bottom of seat mechanism. Weight of sitting on seat will secure seat assembly to cylinder.

NOTE: 2 Paddles below seat are for seat height adjustment and Backrest tilt adjustments.

NOTE2:
PERIODIC RE-TIGHTENING of Armrests screws may be needed throughout use of chair over the years.

MUD 10/2009